FulBore
Resin Models

HOLDEN RED MOTOR

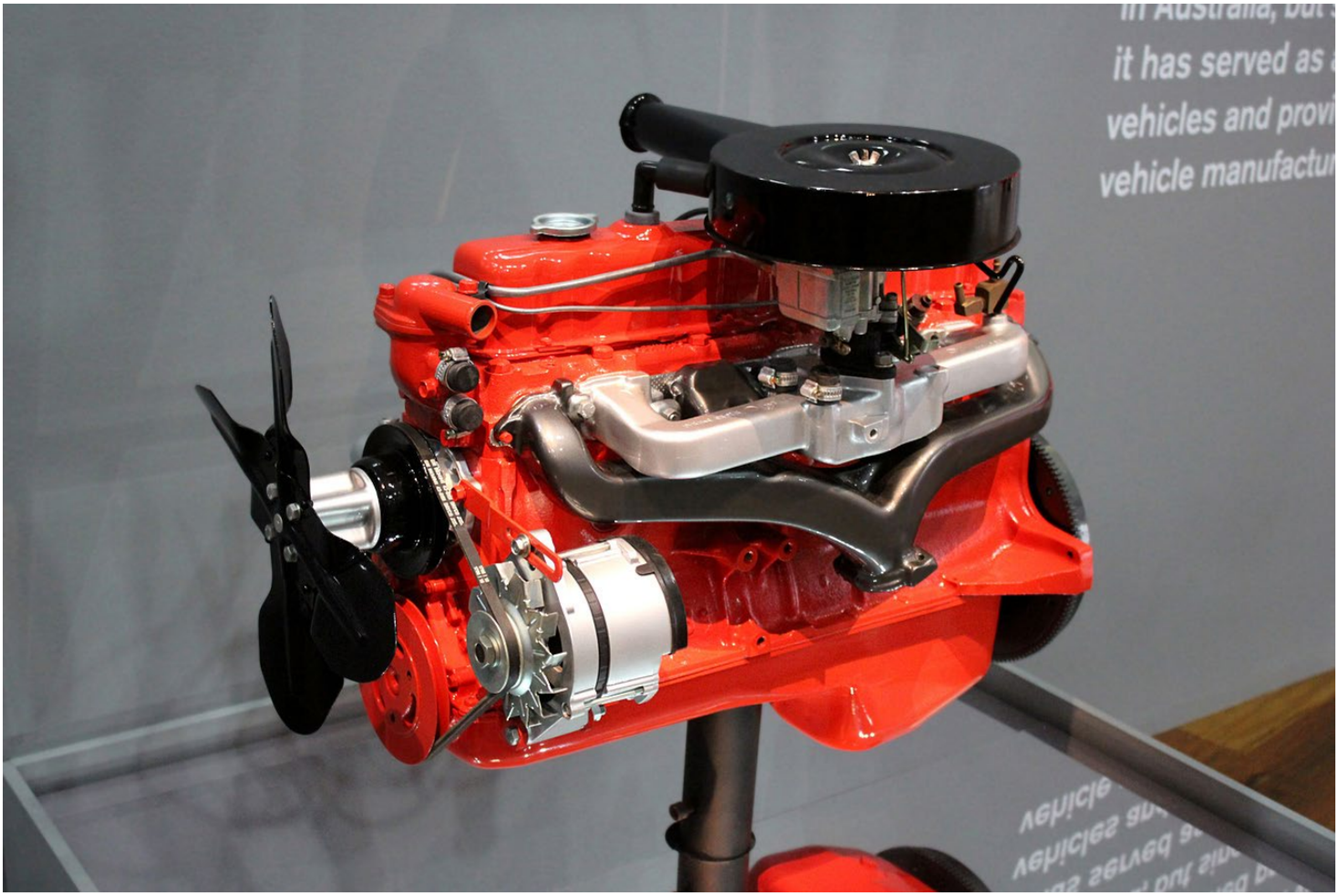

KIT ASSENBLY INSTRUCTIONS

www.fulboremodels.com

The Holden 'Red' motor was manufactured in Australia between 1963 and 1980. It featured a seven-bearing crankshaft, full flow oil filter and hydraulic valve lifters. Denoted by the cylinder block painted red, the engine made its debut in the Holden EH in capacities of 149 cubic inches (2,447 cc) and 179 cubic inches (2.93 L) (or HP) producing 100 brake horsepower (75 kW) and 115 brake horsepower (86 kW) respectively.

Thanks for your purchase, and I truly hope you have fun building your Holden Red Motor.

BEFORE YOU START.

If you've bought this model, it's likely that you have, at some time in your life, put together a plastic model kit. This is a great start! Ideally, you are an experienced model builder for this model. If not, please read the instructions carefully, and do some research before you start the assembly. I've tried to make the fitment of all the parts as good as possible, but in the end, this is a home made kit, not a Tamiya!! Please be patient and take your time.

I've left some of the smaller delicate components on their printing supports for you to enjoy removing! I'd love to remove all of them for you and save you the time, but the supports help me make sure the tiny pieces in the kit make it to you safely intact. I've tried to model all the components with as much detail as possible. Consequently, some sections of the individual pieces are smaller than the supports supporting them. Refer to the pictures in the instructions which are the actual print files, which will hopefully help you tell what's support, and what isn't.

New to RESIN Models? – Read on…… Most model kits over the years have been made from Styrene, using an injection moulding process…. Cutting to the chase, this is a 3D Printed RESIN kit, and the plastic used to make this kit is different to model kits in the past – even different to Cast Resin. Resin is a "thermo-setting" plastic, meaning it hardens with heat, so all the old tricks of heating up styrene model kits to modify them go out the window. Normal modelling glue won't work with resin, and resin can also be a bit more brittle than styrene, so please be careful when handling pieces.

IMPORTANT: Each part of this model will need sanding and preparing to remove layer lines, supports, and other remnants from the 3D print process.
Test fit all parts before committing them to glue.

Keep parts out of direct sun until painted, as UV will deteriorate the resin (it is UV that is used in the print process to cure the resin, so more UV will make parts more brittle)

If you have any questions, or are not happy with any aspect of the model, please contact us first at www.fulboremodels.com, and we'll do our best to help you.

RECOMMENDED MINIMUM TOOLS & MATERIALS

- Tweezers, bent & straight.

- Hobby Knife & "Sprue" Cutters – the finer & sharper the better, for removing parts from supports. Small scissors come in handy too.

- Small modelling files, and sanding sponges / sticks for preparing and fitting parts. 400-1500 wet and dry paper works too.

- Rubber bands & a variety of small clamps (clothes pegs work too) for clamping pieces together after gluing.

- Pin vice drill.

- Plastic putty.

- Thick (gel) and thin CA (Cyanoacrylate - super glue) or 5-minute epoxy. (normal model glue will not work with resin). Foam Safe CA Glue will be required for clear parts.

- Degreaser or wax and grease remover.
- Modelling masking tape, and masking gel.

- Primer suitable for resin - similar to modelling glue, styrene and some plastic primers won't stick to resin.

- Decal softener & hardener

NICE STUFF TO HAVE FOR A BETTER JOB (OPTIONAL)

- Molotow Liquid Chrome Pump Markers

- Polishing compound and a rotary tool (Dremel or similar) with die grinding bits, and polishing pads.

- A gloss clear coat system

SAFETY FIRST

When working with the materials required for the construction of this kit including adhesives, primers, paints, resin parts etc, always work in a well-ventilated area,
3D printing resin is considered toxic and when printing these models, the recommended precautions are taken to avoid contact with the resin. Whilst the resin is considered safe to humans when cured, It is recommended that the necessary precautions are taken to prevent the inhalation of dust when sanding, cutting or filing resin. Wearing a dust mask and working in a well-ventilated area is recommended as a minimum precaution. It is also recommended to wear safety glasses when removing parts from their supports, to prevent pieces of resin ending up in your eyes.
Please also follow all precautions on any products used to build your model, and be careful when using sharp tools.

SYMBOLS USED

Glue

Do not glue

Make a choice

Paint Colour

Cut

PAINT COLOUR GUIDE

1

Zero Paints Semi Gloss Black - ZP-1336

NOTE, some parts that need to be black are printed in black. You can just apply a clear of this instead of paint in some cases.

2

Engine
Zero Paints - Chevy USA Red Engine Paint

3

Metal parts
Outlaw Paints – White Aluminium
or
Alclad - 101 Aluminium Lacquer

4

Chrome
Molotow Liquid Chrome Pump Markers
or
Outlaw Paints – Chrome
or
Alclad II – 107 Chrome

5

Exhaust manifold, and pipe
Outlaw Paints – Dark Iron
Mr Hobby Burnt Iron – H76

6

Fuel Filter
Mr Hobby Clear Orange – H92

7

Fuel Filter
Mr Hobby Clear – H30

ASSEMBLY

1.

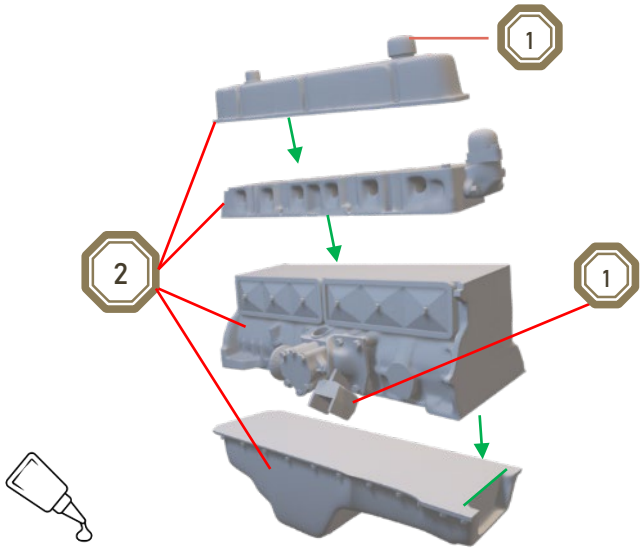

2.

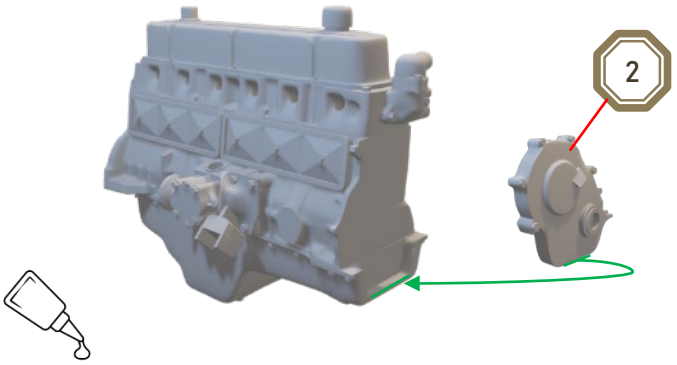

3.

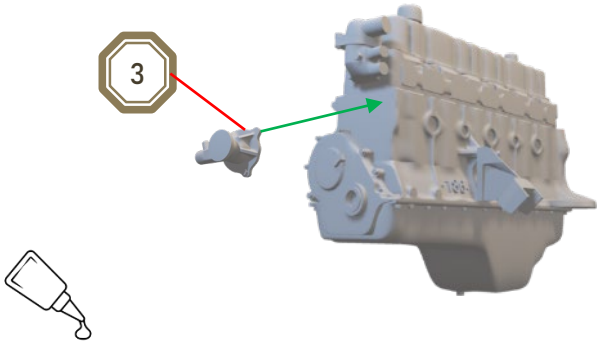

4.

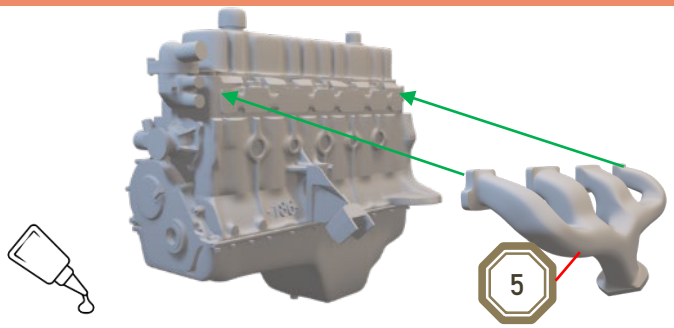

5.

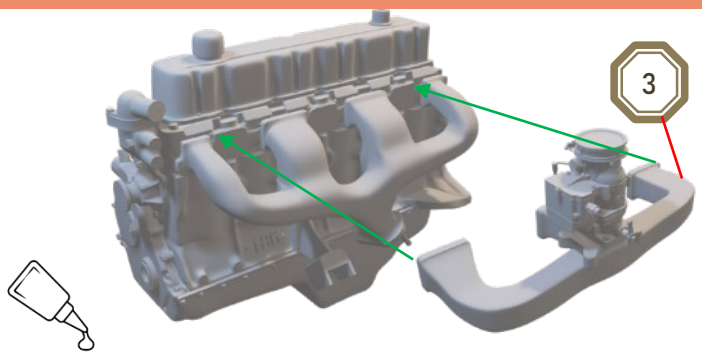

6.

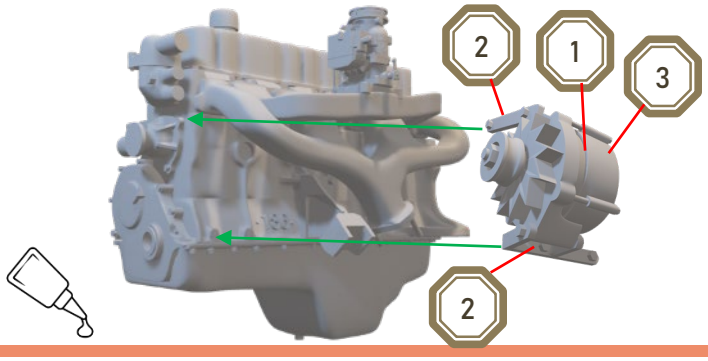

7.

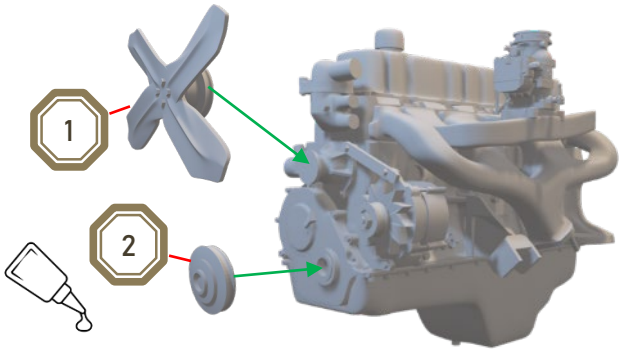

8.

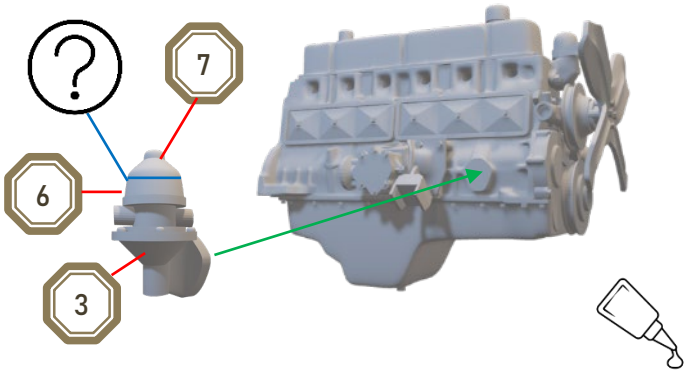

9.

Install plug leads before attaching distributer

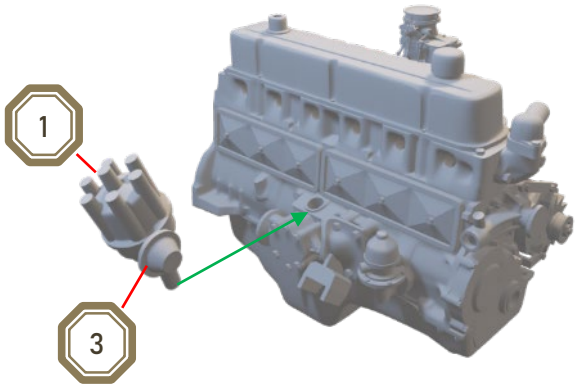

10.

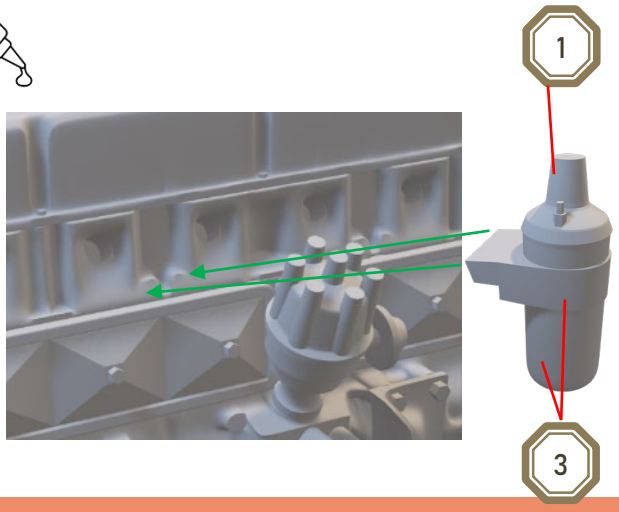

11.

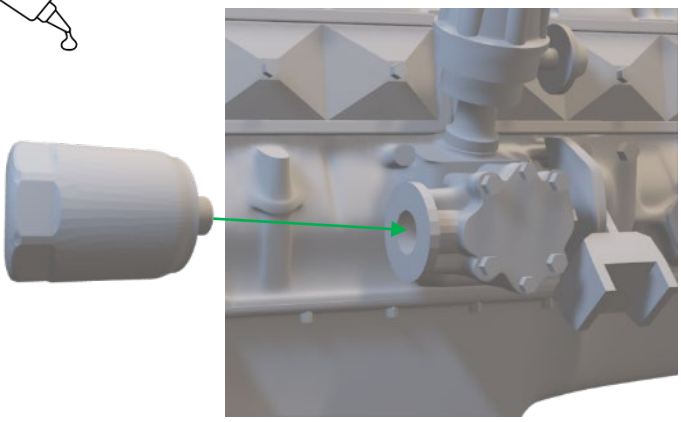

12.

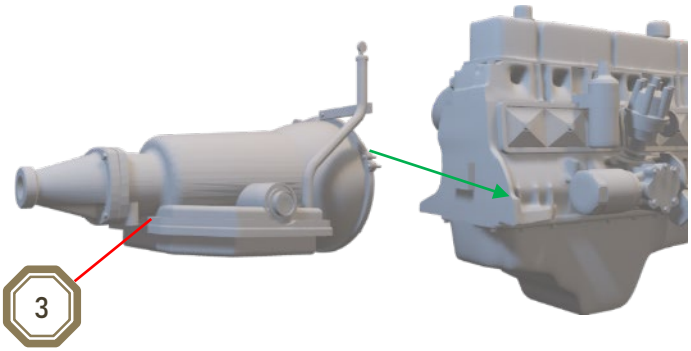

13.

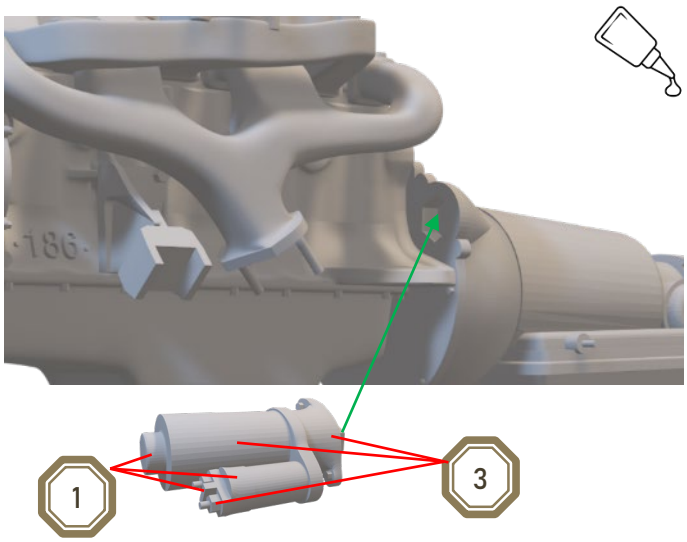

Congrat's. I sincerely hope you enjoy you model, and didn't lose too much hair in the process!

Thank you again for choosing a Fulbore Model Kit

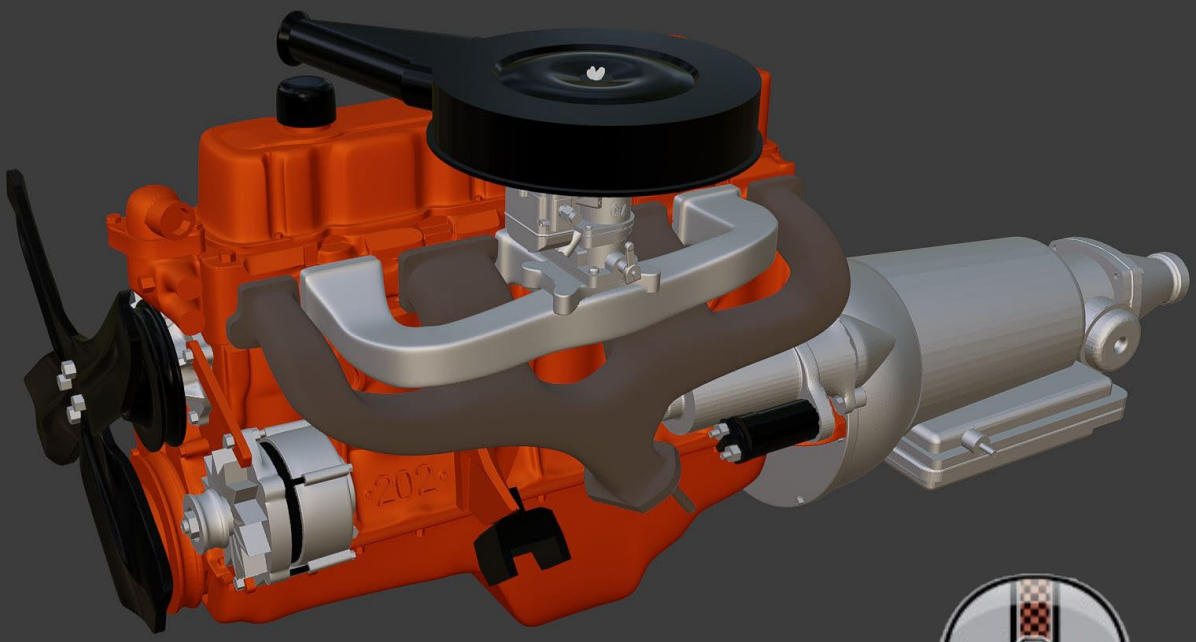

www.fulboremodels.com

FulBore
Resin Models